Implementation of Conservation Voltage Reduction with PV Farm Inverters as a Strategy to Lower Peak Demand

by

Nafia N. Author
Madison S. Author
James T. Author
Emma W. Author

(Faculty Advisor: Dr. Varma, P.Eng., & Dr. Michaelson)

ECE 4415/4416 Computer/Electrical Engineering Design Project

Midterm Progress Report

Department of Electrical and Computer Engineering
Western University
London, Ontario, Canada

Date: December 30, 2025

Table of Contents

1 Introduction/Background 1

1.1 Problem Statement 1

1.2 Design Requirements 1

1.3 Detailed Literature Review 2

1.4 Project Objectives and Scope 4

2 Design Approach 6

2.1 Concept Generation 6

2.2 Concept Evaluation and Final Concept Selection 7

3 Preliminary Analysis 10

3.1 Software Tools Selection 10

3.1.1 Steady-State Software Tools Selection 10

3.1.2 Transient Software Tools Selection 11

3.2 Preliminary Analysis/Computation 12

4 Prototype Validation Plan 14

4.1 Prototype Concept 14

4.2 Updated Parts List 16

4.3 Risk Assessment 16

5 Project Management 17

5.1 Team Member Task Breakdown and contributions 17

5.2 Team Communication and Organization Methodology 20

5.3 Meetings/Attendance Listing 20

6 AI Component 21

7 References 22

8 Gantt Chart 25

9 Appendix 25

1 Introduction/Background

1.1 Problem Statement

Revision 1, December 22, 2025: Updated problem statement

Ontario's electricity demand is projected to nearly double by 2050 [1], increasing pressure on the power grid to meet peak loads while integrating sustainable energy resources. Renewable inverter-based sources, such as photovoltaic (PV) and wind farms, supplement traditional generation by injecting additional active power to the grid [2], but they are not typically used to manage or reduce peak demand. As a result, expensive gas-fired peaker plants are often required to meet peak conditions, driving higher operational costs [3]. This gap in current grid operation strategies motivates the need to explore innovative ways to leverage renewable energy resources to lower peak demands and reduce reliance on additional generation.

1.2 Design Requirements

Revision 1, December 22, 2025:

a. **Voltage Reduction Range:** The reduced steady-state system voltages must be kept within the CSA/IEEE acceptable limits (0.95–1.05 pu).

b. **Reactive Power Capability:** The PV inverter model must support reactive power control within a range of ±0.95 power factor, as per IEEE standard 1547-2018.

c. **Demand Reduction Target:** The peak loads must be reduced by a minimum of 2% compared to the base cases in steady-state (i.e., system with methodology implemented should draw 98% power or lower of original system load).

d. **Simulation Network Scope:** The methodology must achieve the above demand reduction target on a simple distribution feeder, and the IEEE 14-bus system. The feasible load types and renewable integration levels must be specified.

e. **Response Time for Control:** The simulated CVR control algorithm must adjust reactive power and voltage within 10 seconds of detecting peak demand conditions.

f. **Power Quality Compliance:** Voltage control must not cause total harmonic distortion (THD) or flicker levels to exceed limits specified in standard IEEE-519 for distribution networks.

Note: The following changes were made since the Project Proposal submission: "Demand Reduction Target" requirement added, "Simulation Network Scope" requirement modified.

1.3 Detailed Literature Review

Conservation Voltage Reduction (CVR): Commonly employed by power distribution utilities, CVR is the strategy of lowering grid voltages during periods of high demand to the lower end of the industry acceptable voltage range (e.g., 0.98 pu vs. 1.03 pu) [4], [5]. All loads in the system continue to operate as normal, while decreasing line losses and reducing overall energy demand during peak times. For reference, the province of Ontario uses 18,000MW of power on an average day [6]. With a 1% reduction, 180MW of power can be potentially saved. Several studies have demonstrated the advantages of reactive power control of smart PV inverters for controlling voltages to achieve CVR [4], [7].

Lines Losses: In Ontario, line losses account for ~2% of the total power transmitted [8]. The first type of line losses relates to line resistance as every conductor has an internal resistance [9]. Heat is produced and dissipated as current flows. This power never reaches the end consumer, essentially passing the cost of line losses onto customers.

Smart Inverter Controls: Solar farms use inverters to convert generated DC power to AC [10], [11]. At first, their primary function was to convert DC to AC [3], but they have since advanced and now include voltage regulation controls: volt-watt control and volt-var control [11], [12]. These controls can be used to implement CVR [12]. Volt-watt control adjusts active power output to regulate voltage whereas volt-var control adjusts reactive power output to regulate voltage. Volt-watt control requires curtailing active power to reduce bus voltages, which is unfavorable for PV farm owners who would lose revenues from reduced power production [13]. Therefore, volt-var control is preferred for implementing CVR.

Load Flow Studies: Load flow studies determine the magnitude and angle of all bus voltages in the studied networks, which can then be used to compute power flows and line losses with

various network parameters and operating conditions [14]. The results of these studies will support our team in assessing the effectiveness of our proposed methodology in the studied networks.

Relevant Standards:

a. ANSI C84.1 [5]
b. IEEE 1547-2018: IEEE Standard for Interconnection and Interoperability of Distributed Energy Resources with Associated Electric Power Systems Interfaces [15].
c. 2800-2022: IEEE Standard for Interconnection and Interoperability of Inverter-Based Resources (IBRs) Interconnecting with Associated Transmission Electric Power Systems [16].

Active and Reactive Power Curves of PV Farm: Figure 1 shows the typical power output of a PV farm on a sunny day in blue. The reactive power availability is depicted in red and was found using $Q = \sqrt{S^2 - P^2}$ where S is the MVA rating of the PV farm inverter. These curves will supplement our project by determining realistic limits of available reactive power in the PV farm elements in the load flow studies that will be conducted.

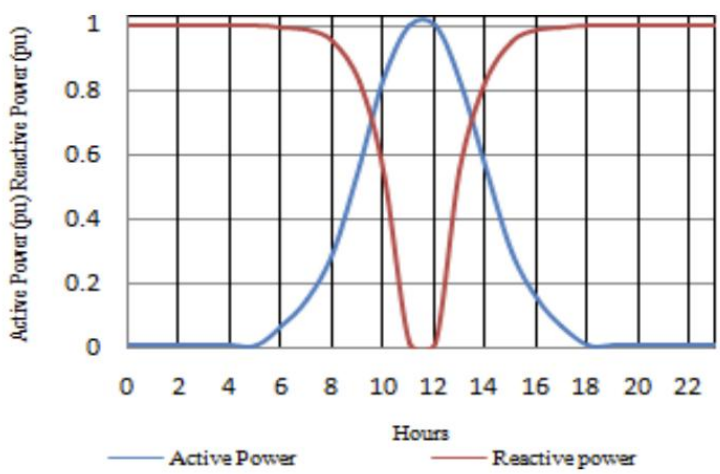

Figure 1: Typical active power and reactive power capability of a PV solar farm [12]

1.4 Project Objectives and Scope

1. ***Data analysis*:**
    a. Analyze the typical load curve of Ontario throughout each season and determine if they are distinct enough to perform separate studies on**.**
    b. Analyze the data on Ontario's solar power output and develop an accurate P and Q curve similar to Figure 1 for both a sunny day and cloudy day. Determine the regions in Ontario where these curves are applicable and quantify the error if possible.
2. ***Concept validation*:** perform load flow studies on the distribution feeder in Figure 2 under various conditions including:
    a. Different load types: constant impedance (purely resistive, mixture of resistive and reactance), ZIP load (combination of constant impedance, constant current and constant power loads).
    b. Different sun conditions: sunny day and cloudy day.
    c. Different hourly demands: per season based on item 1a.
    d. Different PV farm locations: place the PV farm inverter at various buses along the system and analyze where the largest effect is.
3. ***Assess feasibility***: perform load flow studies on the IEEE 14-bus system (Figure 3) based on the results from item 2 (i.e., under what conditions was the concept validated in the distribution feeder studies). The 14-bus system represents a more realistic system.
4. ***Quantify Peak Reduction***: determine if peak load demands on the IEEE 14-bus system can be reduced with CVR through PV inverter reactive power control. Quantify the demand reduction (i.e., % reduction) and specify the conditions under which at least a 2% reduction is met.
5. ***Measure line loss impact***: identify and quantify the % reduction in line losses with proposed CVR methodology.
6. ***Estimate cost savings***: if applicable, evaluate cost savings based on reduced peak demand and line loss reduction.
7. ***Explore AI applications***: develop, train and test the "Peak-Aware CVR Scheduler" and document the AI model (see "AI Component" section for more details).

8. ***Develop CVR Prototype***: design, build and test the physical prototype, a circuit modelling a realistic transmission line with CVR functionality and the effects of implementing CVR. See Section 4 for more details.

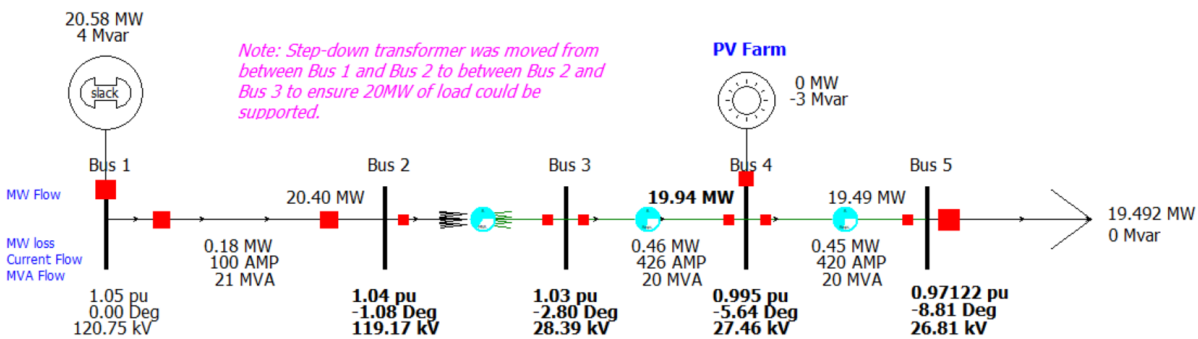

Figure 2: Selected Distribution Feeder to Validate Methodology on

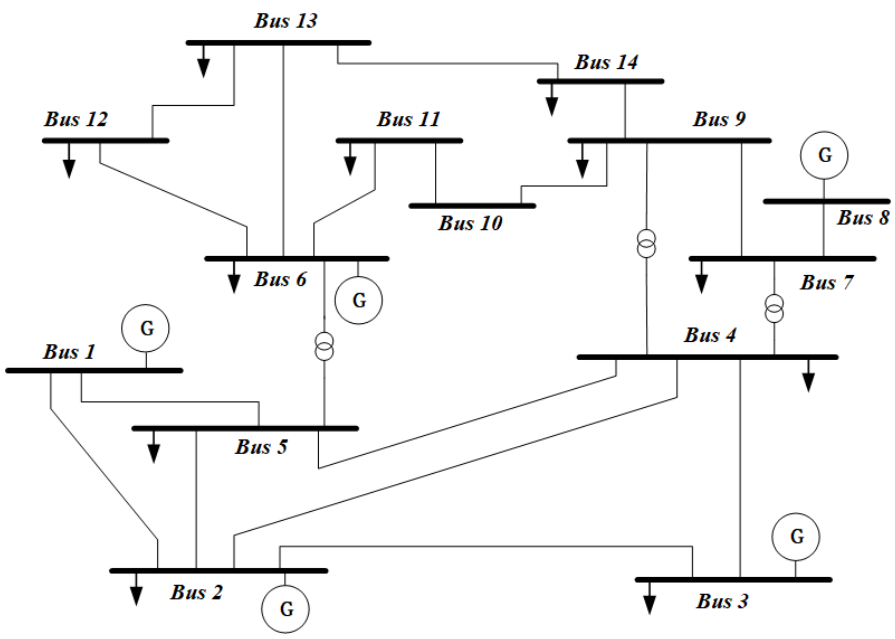

Figure 3: IEEE 14-bus system [17]

By the end of this project, our goal is to develop a summary of the different cases and conditions under which this methodology is feasible (i.e, achieves at least a 2% reduction in peak loads while satisfying the remaining requirements in Section 1.2). This summary will specify the acceptable combinations of load levels, load types, PV farm location and size, and sun conditions under which implementing CVR with PV inverters is effective. The "Peak-Aware CVR

Scheduler" AI tool should supplement this summary by performing predictive analytics on whether this methodology can be utilized for the next day based on certain inputs. This project will contribute to addressing the grid operation problem identified in Section 1.1. The IESO forecasts an average annual energy demand growth rate of 2.2% per year between 2026 and 2050 [18]. Though this methodology is not expected to be feasible under all conditions, even partial implementation resulting in an occasional 2% reduction in load is significant when compared to the IESO forecasts.

2 Design Approach

2.1 Concept Generation

Our team examined the demand and renewable integration challenges identified in Section 1.1 from multiple perspectives. Emphasis was placed on ideating approaches that could manage peak demand while leveraging renewable energy resources, but conventional based approaches were also considered to ensure diversity and enable objective comparison in the concept generation stage. All concept categories were drawn from the different layers of power systems operation, including generation-orientation solutions, demand-side management strategies, infrastructure-based approaches and more advanced control strategies:

- ***Generation-Oriented Solutions*** – addressing peak demand by increasing available supply, such as integrating more PV and wind farms, or gas-fired peaker plans.
- ***Demand-Side Management Strategies*** – reducing peak demand by manipulating the load, such as load curtailment programs, demand-response programs, and conservation voltage reduction.
- ***Infrastructure-Based Approaches*** – enhancing system capacity, such as integrating more battery energy storage systems (BESS) to complement existing generation in order to shave peaks.
- ***Advanced Control Strategies*** – leveraging existing grid assets rather than new ones, such as using PV smart inverters capabilities to implement CVR. Essentially, focusing on how current infrastructure is operated rather than focusing on building new ones.

From the above categories, the potential concepts were selected for further evaluation:

- ***Concept 1 – Optimizing gas-fired peaker plants operation (baseline approach)*** to reduce costs and negative environmental impacts. Individuals in the power industry are well versed in these plants, knowledgeable on how to operate them, and have the required skillset to do so.
- ***Concept 2 – Increasing renewable generation capacity of PV and wind farms.*** Methods on how to increase the capacity of renewables could be explored. Renewable sources are becoming more and more large scale as green energy becomes a larger focus.
- ***Concept 3 – Demand response programs that are specifically renewable-driven***. Focusing more on the consumer side, methods in how to manage and influence consumer usage could shift peak demands and make peaks more manageable. Ontario is already taking initiative to implement more smart meters in customer homes, which can be leveraged.
- ***Concept 4 – Innovating Battery Energy Storage Systems for peak shaving.*** Instead of focusing on the renewable generation itself, focus could be placed on the integration and operation of BESS and innovating new functionalities.
- ***Concept 5 – Conservation voltage reduction using PV inverter reactive power***. Investigation on how to control and operate renewables to reduce peak demands themselves could discover a simple, but effective operating strategy to manage demand that avoids the need to build and expend costs on new infrastructure.

These concepts represent various technically feasible approaches, including the conventional gas-fired peaker plants, and more renewable and control-based solutions.

2.2 Concept Evaluation and Final Concept Selection

Two decision matrices were developed to compare the five candidate concepts: one to compare them at a high level, and the other to compare them based on the specified design requirements. The evaluation criteria for the first matrix were selected to reflect the problem statement and the criteria for the second matrix are directly from the design requirements. To ensure consistency in the evaluation, a scoring system from 1 to 5 was used for all criteria:

- **Score of 1 (Does Not Satisfy)**: The solution does not address the criteria required, or only partially does.

- **Score of 3 (Partially Satisfy)**: The solution can meet the criteria required under limited conditions, or required assumptions, additional infrastructure and coordination.
- **Score of 5 (Fully Satisfy)**: The solution fully meets or exceeds the criteria required without introducing additional constraints or dependencies.

Scores of 2 and 4 reflect solutions that are between the above categories.

Additionally, all criteria in the decision matrices were treated with equal weighting as all criteria in the first matrix were equally important, and all criteria in the second matrix were pass/fail nature.

Table 1: Preliminary Concept Screening Matrix

Concept		Criteria						
		Reduces Peak	**Uses Renewables**	**Cost**	**Complexity**	**Uses Existing Infrastructure**	**Scalability**	**Total**
1	Gas-fired peaker plants	2	1	1	4	4	5	17
2	Increased renewable capacity	2	5	3	3	3	4	20
3	Renewable-driven demand response	3	4	4	3	4	3	21
4	Innovative BESS usage	3	5	2	3	3	3	19
5	CVR through PV inverter	4	5	5	4	5	4	27

Table 1 indicates that concept 5, using PV inverter to implement CVR, is the strongest candidate due to its high renewable usage, low implementation cost and ability to leverage existing assets in the power grid. Increased renewable capacity and renewable-driven demand response were the next two strongest candidates. Based on these results, the top 3 candidate concepts were carried forward for a more detailed evaluation specially focused on the design requirements.

Table 2: Engineering Requirements Evaluation Matrix

Concept		Criteria						
		Meet voltage limits	**Reactive power capability**	**2% peak reduction**	**Applicable to various systems**	**Control response time within 10 seconds**	**Complies with distortion limits**	**Total**
2	Increased renewable capacity	3	5	1	3	4	3	19
3	Renewable-driven demand response	3	4	4	3	3	5	22
5	CVR through PV inverter	5	5	4	5	5	5	29

Table 2 indicates the implementation of CVR through PV smart inverter reactive power capabilities that best satisfies the requirements of the project and best fills the gap specified in the problem statement. Overall, this solution would best ensure that bus voltages remain within acceptable limits, are applicable to all system types (both transmission and distribution), and use existing assets, avoiding the need for new infrastructure.

The final concept selected was concept 5: CVR implementation through PV smart inverters. Our team will explore the conditions in which the reactive power capabilities of PV farm inverters can be leveraged to implement Conservation Voltage Reduction (CVR) as a strategy to lower peak load demand. As a secondary objective, this project will also explore whether implementing CVR with this intention can simultaneously decrease line losses within the studied networks. To conduct these investigations, our team will perform a series of load flow studies across different network models. Additionally, an application of AI within this project will be explored.

3 Preliminary Analysis

3.1 Software Tools Selection

To assess our design performance, system studies must be completed to quantify the results and compare them to the design requirements. These requirements can be broken down into two main categories: steady-state behaviour (requirements a, b and c) and transient behavior (requirements e and f). Requirement d is not related to system behaviour These two distinct categories require different software tools to assess them. Tables 3 and 4 below shows the decision matrices for steady-state and transient power systems analyses, respectively.

3.1.1 Steady-State Software Tools Selection

Table 3: Steady-State Software Simulator Decision Matrix

Software		Criteria					
		Accuracy	**CVR Capability**	**Usability**	**Industry Relevance**	**Integration**	**Total**
1	GridLAB-D [19]	3	4	2	3	4	16
2	DIgSILENT [20]	5	4	2	3	4	19
3	OpenDSS [21]	4	5	2	4	3	19
4	PSS®E [22]	5	3	3	5	4	20
5	PowerWorld [23]	5	4	4	5	4	22

Note: Each tool was scored on a scale from 1 (poor) to 5 (excellent) to support an informed and transparent selection.

PowerWorld emerged as the highest-scoring tool overall. Beyond its strong technical capabilities, PowerWorld is the software used throughout our course labs, meaning the team already has hands-on experience with the platform. This choice was also guided by discussions with our professors, who recommended PowerWorld as a practical and effective tool for CVR

studies in an educational setting. Its intuitive interface and clear visualizations make it especially well-suited for exploring voltage profiles, parameter changes, and feeder-level behavior within the scope of a capstone project.

PSS®E also ranked highly, primarily due to its accuracy and strong industry relevance. While it is less user-friendly for detailed distribution-level CVR analysis, it remains valuable for understanding system-level impacts. Depending on time constraints, we plan to use PSS®E to study the IEEE 14-bus system to validate broader system behavior and complement our PowerWorld results.

Other tools such as OpenDSS and DIgSILENT PowerFactory showed strong CVR-specific features but were not selected as primary platforms due to steeper learning curves, licensing considerations, and lower alignment with course-supported tools. These tools remain viable for future work or more specialized studies beyond the scope of this project.

3.1.2 Transient Software Tools Selection

Table 4: Transient Software Simulator Decision Matrix

Software		Criteria					
		Accuracy	**CVR Capability**	**Usability**	**Industry Relevance**	**Integration**	**Total**
1	MATLAB / Simulink [24]	4	4	3	4	5	20
2	PSCAD [25]	5	5	5	5	4	24
3	DIgSILENT (Dynamic RMS) [26]	4	4	4	5	4	21
4	PowerWorld Dynamics [27]	4	3	3	5	4	19

Note: Each tool was scored on a scale from 1 (poor) to 5 (excellent) to support an informed and transparent selection.

PSCAD emerged as the highest-scoring tool overall. Its modeling capability allows for detailed simulation of inverter-based CVR control, voltage settling behavior, and harmonic distortion,

making it well-suited for evaluating response time and IEEE-519 compliance (requirements e and f). PSCAD was selected as the primary software to use for transient studies analysis.

While our team is more familiar with MATLAB/Simulink, it lacks the advanced modelling capabilities PSCAD has for detailed transient analysis and was therefore not selected as a primary tool for our project. Other tools, such as PowerWorld Dynamics and DIgSILENT PowerFactory have limited ability to capture fast inverter switching behavior and harmonic effects, making them less suitable for validating requirements e and f (transient performance and power quality) in this project.

3.2 Preliminary Analysis/Computation

Table 5: Analysis Method Evaluation Matrix

Analysis Method		Criteria					
		Insight	**Cost**	**Validation Value**	**Data Feasibility**	**Readiness**	**Total**
1	Steady-State Load Flow Studies	5	4	5	4	5	23
2	Transient System Studies	5	3	5	3	4	20
3	IESO Load Curve Analysis	4	5	4	5	4	22
4	AI-Based Load Forecasting	4	3	4	4	4	19
5	Synthetic Dataset AI Training	3	4	3	5	4	19

An evaluation matrix was developed to evaluate the preliminary analysis and computation methods used to assess design performance prior to full system implementation. Each method was evaluated based on the level of insight it provides into system behavior, computational cost, validation value, data feasibility, and readiness to inform later stages of the design. Scores were assigned on a scale from 1 (poor) to 5 (excellent).

The evaluation matrix indicates that all selected analysis methods contribute meaningfully to assessing the proposed design. Steady-state load flow studies provide the greatest value, as they directly quantify voltage regulation, reactive power behavior, and peak demand reduction, which

are central to the problem being addressed. Transient system studies are also critical, as they enable assessment of dynamic voltage response and power quality impacts that cannot be captured under steady-state assumptions. Together, these studies provide strong validation of voltage control strategies and are highly suitable for informing final system implementation.

IESO load curve analysis offers strong insight into real-world demand patterns while remaining inexpensive and highly feasible due to the availability of historical data. With this data and analysis, we can identify peak operating conditions under which CVR is most effective. AI-based load forecasting further enhances predictive capability by estimating next-day load profiles and identifying peak-demand periods, which are critical for evaluating CVR effectiveness. Synthetic dataset training supports early model development and workflow refinement when real system data is limited, though its validation value is lower than analyses based on actual network data.

Overall, the preliminary analyses conducted provided a strong foundation for the project by combining real-world data exploration, predictive modeling, and system-level parameter studies. Together, these methods reduce design risk and ensure that subsequent simulations and implementations are grounded in both data-driven insight and power system behavior. Table 6 below summarizes how our project results can be quantified and measured against the design requirements specified in Section 1.2 using the analysis methods our group has chosen:

Table 6: Design Requirement and Analysis Methods Alignment

Design Requirement	**Analysis Methods Used to Assess**
(a) Voltage reduction within 0.95–1.05 pu	Steady-state load flow studies
(b) ±0.95 power factor reactive capability	Steady-state load flow studies
(c) ≥2% peak demand reduction	Steady-state load flow studies, IESO load curve analysis, AI-based load forecasting
(d) Applicability to multiple network models	Steady-state load flow studies, transient system studies
(e) ≤10 s CVR control response time	Transient system studies
(f) IEEE-519 power quality compliance	Transient system studies

Steady-state load flow studies can indicate if the voltage and reactive power constraints can be satisfied while achieving the required demand reduction. Transient system studies can indicate

the feasibility of meeting dynamic response and power quality requirements, while load curve analyses and AI-based forecasting ensure that we are studying realistic operating conditions. Collectively, these analyses provide confidence that the design can be measured to meet all specified requirements.

4 Prototype Validation Plan

We have changed our prototype design since the Project Proposal submission. Our updated prototype is a basic circuit that models a real-life distribution feeder and the effects of implementing CVR on the system voltages. We chose to focus our prototype on the illustration of CVR as it is the primary operating technique used in our project and a demonstration of its effect provides meaningful insight into the fundamentals of how our project works.

4.1 Prototype Concept

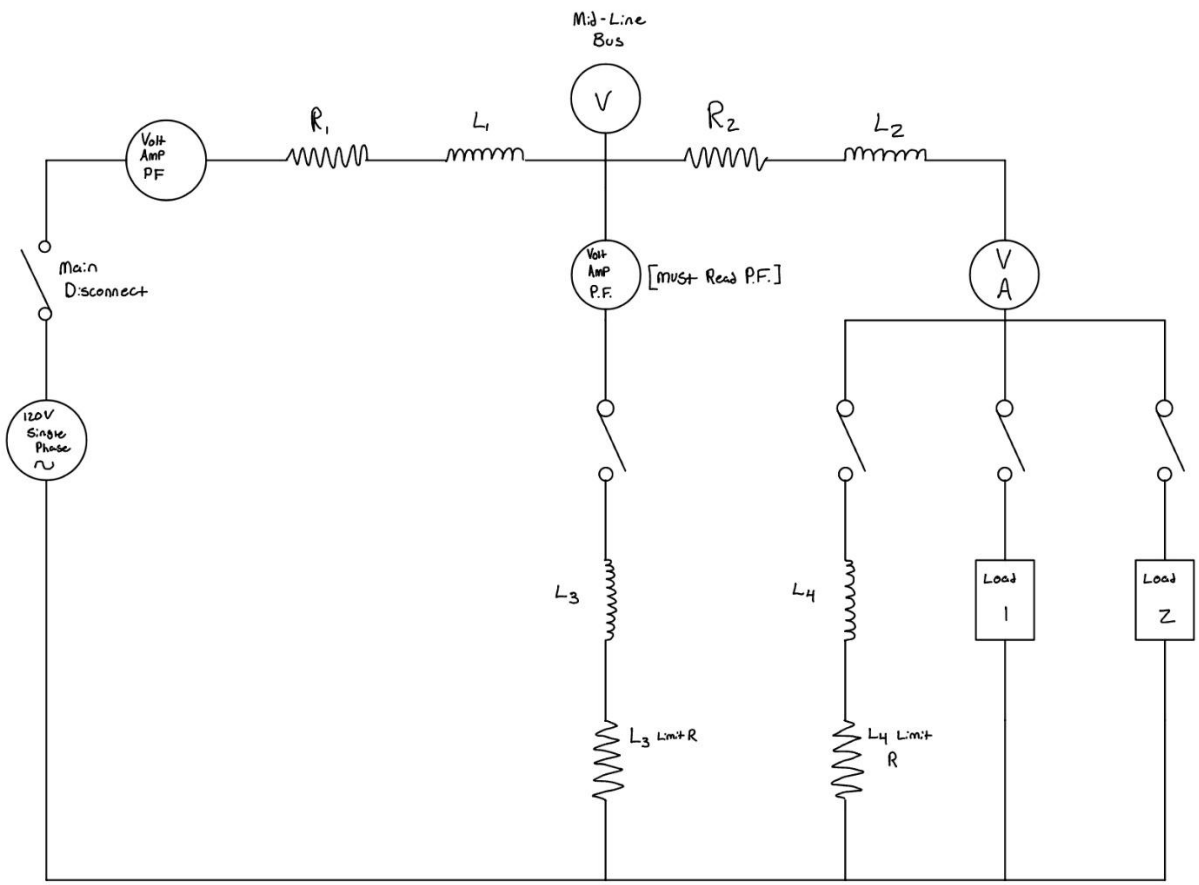

Figure 4: Prototype Circuit Schematic

The prototype circuit for this project is shown above. The concept is as follows: R1 and L1 represent the scaled down losses of a transmission line from generation to a midline bus on a real power system. At the midline bus, there will be an inductor (L3) installed with a disconnect switch. L3 will represent a solar farm and its inverter, and thus its ability to absorb reactive power. The second set of resistances and inductances, R2 and L2, represent the second set of line losses that are encountered by latter transmission lines. This line feeds a bus that has another inductor (L4) with a disconnect, in this case simulating if the solar farm were connected to the bus at the end of the power system. Two separate loads are connected to the same bus to represent the real-life loads on the system.

Throughout the system, there will be strategically placed monitoring devices. One monitor will be located just after the main disconnect. This monitor will read the incoming system voltage, and the total operating current of the prototype. This gives the baseline readings for the rest of the system. The second monitor will be located at the midline bus and will read the voltage at the midline bus, which depends on the load of the system, and will decrease due to the first set of RL series loads. The monitor will also keep track of the current through the inductor leg (L3) since there will be no real power drawn by the inductor. The monitor will have to keep track of the power factor, representing the reactive power in that leg of the system. The final monitor in the system will be located at the end of the transmission line (After R2 & L2, but before the loads and secondary inductor L4). This monitor will keep track of the bus voltage coming to the loads from the transmission line, as well as the current being drawn by the loads, and the power factor due to the second inductor.

With these monitoring devices in place, we can easily observe how the system reacts to the injection and absorption of reactive power from the inductors representing solar farms. In theory, with a load connected, we should see the incoming voltage as 120V, and the current corresponding to the load. The secondary meter should show a lower voltage, representing the losses along a transmission line, and the final voltage should be slightly lower than the midline voltage, due to the secondary losses in the transmission line. This represents the system without any reactive power absorption. If inductor L3 is introduced to the system, we should see the voltage at the midline bus increase, the voltage at the load bus increase, and the power factor change. This simulates the solar farm absorbing reactive power and keeping the load in the

operating range. The second scenario is if the inductor is switched from the midline bus to the load bus. This simulates the solar farm being located much closer to the loads on the system. In this scenario, we should see the voltage at the load bus increase greatly, while the midline voltage increases slightly.

4.2 Updated Parts List

- 1 x Main Disconnect
- 2 x Small L Disconnect
- 3 x RL Enclosure boxes
- 3 x Voltage/Current/PF Monitors
- 2 x Octagon junction boxes
- 2 x Single pole switches
- 2 x Single gang boxes
- 2 x 120V Receptacles
- 4x Power Resistors
- 4 x Power Inductors
- 1 x 120V Power plug
- Conduit
- Fittings
- Wire

4.3 Risk Assessment

There are safety concerns that must be considered to ensure the circuit operates as intended and no one is put in danger when operating the prototype. Firstly, the fuse rating for the main disconnect must be lower than the rated breaker for the system it is powered by (most likely 15A). This ensures that the prototype will stop drawing power before getting anywhere near the point where it will trip the breaker on the supply circuit. There has also been the addition of limit resistors to the circuit (R3 & R4). These resistors ensure safe disconnection of the inductors simulating the solar farms, especially if they are disconnected while the prototype still has supply power. Additionally, the monitoring devices previously discussed enable real-time and quick detection of abnormal behaviour during the testing phases and final demonstration of the prototype.

Several other concerns that have been considered are CSA approval and using CSA approved parts. Since our prototype requires working with 120V, we must obtain CSA certification to safely operate and demonstrate our prototype. We have informed Eugen from the electronics shop of our design and discussed the certification process with him. We will also send the final

schematic and parts list to them for approval prior to any CSA assessment. Some parts that are required to be CSA approved include wire, boxes, resistors, inductors, disconnects, etc. All parts used for this prototype will be certified and installed in a way that adheres to all CSA standards. This ensures safe operation of the system for demonstration purposes.

Additionally, switching inductive elements under load may produce transient over-voltages due to stored magnetic energy. This risk is mitigated through the use of limit resistors R3 and R4, appropriately rated switching hardware, and controlled operating procedures. Thermal effects in power resistors and inductors may arise during sustained operation, and components will therefore be selected with suitable power ratings and operated for limited durations during demonstrations.

As the prototype represents a scaled approximation of a real distribution feeder, it is intended as a conceptual validation tool rather than a full system replica. To ensure the prototype parameters are representative and will not cause abnormal behaviour, steady-state load flow studies will be conducted in PowerWorld. These studies will ensure the per unit values (voltages, impedances, etc.) in the prototype match the per unit values observed in the system studies. Particularly, these studies will determine what resistor and inductor values will be used in the prototype.

5 Project Management

5.1 Team Member Task Breakdown and contributions

The updated task breakdown is provided below. Modifications were made to the tasks themselves since our scope of work has changed since the proposal in terms of what networks will be studied and what our physical prototype is. Team roles were also slightly modified to reflect this change in scope. Contingencies have been included for critical items (which are noted in red).

Table 7: Tasks Breakdown

Note: tasks in red are critical

Task / Responsibility	Team Member Responsible
Analyze distribution feeder network model presented by Dr. Varma in ECE 4464 Lab 2. Assess whether it is appropriate for studies and make necessary modifications to ensure it can be used for project. ***Contingency**: if we cannot figure it out on our own, contact Milad (TA who is familiar with the network).*	Emma
Determine which cases and conditions to run load flow studies under for distribution feeder (Figure 2).	All
Determine CVR factor for relevant buses in both networks (i.e., how much to reduce bus voltages by).	All
Analyze load curves provided on IESO website to determine if behaviors are distinct enough by season to separate into various cases.	Nafia
Analyze solar energy power output in Ontario, including where PV farms are most densely located, and the relevant P and Q curves for a sunny day and cloudy day.	James
Develop script to automate load flow studies on Power World and PSSE (using Python or other language).	Emma
Complete Dx network (Figure 2) studies using automation tool under varying conditions specified in Section 1.4. ***Contingency**: if we cannot successfully develop automation tool, manually complete system studies, and reduce number of cases as needed to comply with timeline.*	Emma, Nafia
Discuss results of Dx network results and determine which studies to perform for IEEE 14-bus system.	All
Familiarize / learn how to use PSS/E software.	Emma, Nafia
Complete IEEE 14-bus system (Figure 3) studies using automation tool under varying conditions specified in Section 1.4. ***Contingency**: if we cannot successfully develop automation tool, manually complete system studies, and reduce number of cases as needed to comply with timeline.*	Emma, Nafia

Review and analyze results of all load flow studies, including if they meet OPF constraints.	All
Finalize prototype schematic (including any protection elements).	James
Conduct load flow studies on finalized protype schematic to assess feasibility and determine appropriate per unit values for all resistors and inductors. ***Contingency**: if struggling to validate studies, reach out to Milad or electronics shop for physical prototypes they have successfully implemented to help determine appropriate per unit values.*	James
Finalize materials list for prototype, ensuring they are all CSA approved and align with studies.	James
Send final schematic and material list to Eugen and supervising professors for review prior to building.	James
Obtain CSA approval on prototype ***Contingency**: if we cannot successfully obtain CSA certification, build prototype outside of school grounds and film video of demo that can be played at the final presentation.*	All
Once all necessary approval is received, build and test physical model.	James
Finalize data set to use for AI model training set.	Maddy
Develop a script (Python, etc.) to automatically compare PSS/E and Power World output with OPF values.	Maddy
Train AI model (next-day load forecaster with P10/P50/P90 bounds).	Maddy
Compare AI model projected results with actual results based on historical data.	Maddy
Develop KPI dashboard & figures for final presentation (Peak shaving %, energy saving %, line-loss Δ).	All
Complete final presentation / demo (including AI integration)	All
Complete final report (methods, results, risks, appendix with scripts)	All

5.2 Team Communication and Organization Methodology

Our team has a messaging group chat that we use to ask questions and determine meeting times. All team meetings, both with and without faculty advisors, take place on Zoom to ensure we have the screen-share function available if needed. We communicate with our faculty advisors primarily through email. We do not have a set, reoccurring meeting. We instead reach out a week or two in advance to our advisors to set up meetings when discussions are needed. So far, these communication methods have proven effective and there are no issues at the moment.

Our team roles are specified below:

- ***Maddy – AI Lead****:* completes and takes responsibility for all tasks related to the "Peak-Aware CVR Scheduler.
- ***James – Hardware Lead***: completes and takes responsibility for all tasks related to developing the physical prototype.
- ***Nafia – Studies Co Lead***: completes and takes responsibility for half of the tasks related to performing load flow studies.
- ***Emma - Studies Co Lead and Primary Communicator***: completes and takes responsibility for half of the tasks related to performing load flow studies and is the primary communicator with faculty advisors.

5.3 Meetings/Attendance Listing

No.	Date	Attendees
1	September 5, 2025	James, Maddy, Nafia, Emma, Dr. Varma
2	September 9, 2025	James, Maddy, Nafia, Emma, Dr. Michaelson, Dr. Varma
3	September 23, 2025	James, Maddy, Nafia, Emma, Dr. Michaelson, Dr. Varma
4	October 30, 2025	James, Maddy, Nafia, Emma, Dr. Michaelson, Dr. Varma
5	November 4, 2025	James, Maddy, Nafia, Emma
6	November 11, 2025	James, Maddy, Nafia, Emma
7	November 11, 2025	James, Maddy, Nafia, Emma, Dr. Michaelson, Dr. Varma
8	November 30, 2025	James, Maddy, Nafia, Emma
9	December 16, 2025	James, Maddy, Nafia, Emma
10	December 16, 2025	James, Maddy, Nafia, Emma, Dr. Michaelson

Please see the Appendix for the minutes from meetings with faculty advisors.

6 AI Component

Note: this section was added to accommodate for Maddy who is in the AI dual degree program

The AI component uses PowerWorld simulation outputs to learn the relationship between CVR actions and peak reduction under PV-attached operating conditions and predict next-day peak timing and magnitude using prior-day system behavior. The intent is a day-ahead recommendation of CVR settings that reduces forecast peak while respecting voltage limits.

Simulation-derived inputs:

- Bus/feeder voltage levels $V(t)$ and system or feeder load P(t), $Q(t)$ from PowerWorld runs with PV connected.
- PV operating condition descriptors (e.g., penetration level/scenario index) and control settings used in the run (e.g., CVR voltage setpoint or equivalent operational parameter).
- Optional summary features computed from the simulated state: minimum bus voltage, voltage spread, net load ramp rate, and prior-hour statistics.

Learning targets:

- **Peak identification:** peak hour t and peak magnitude P computed from the simulated $P(t)$ profile.
- **CVR effectiveness:** ΔP and ΔE (energy change) achieved under CVR versus baseline for the same PV scenario, plus any constraint flags (e.g., voltage violations).

Model functions:

1. **CVR sensitivity model (impact predictor):** learns a mapping (PV scenario, operating features, CVR setting) → (ΔP, ΔE, Vmin) (PV scenario, operating features, CVR setting) → (ΔP, ΔE, Vmin) trained entirely on PowerWorld-generated datasets. This creates a fast surrogate for "how much peak reduction a CVR action produces" under varying PV and operating conditions.
2. **Next-day peak forecaster:** predicts next-day peak timing and magnitude from previous-day simulated measurements and features.

Decision logic:

- Use the peak forecaster to estimate next-day peak conditions.
- Evaluate candidate CVR settings with the CVR sensitivity surrogate to select a setting that maximizes ΔP (and/or cost reduction) subject to voltage band compliance (0.95–1.05 pu) and inverter capability assumptions.

Validation:

- Hold out PowerWorld scenarios (PV penetration, load levels, operating conditions) for test-only evaluation.
- Report forecast error on peak time/magnitude and accuracy of predicted ΔP versus simulated ground truth. Confirm that the selected CVR setting maintains voltage compliance in the full PowerWorld run.

7 References

[1] Independent Electricity System Operator (IESO), "Electricity Demand in Ontario to Grow by 75 per cent by 2050," News & Updates, 16 Oct. 2024. [Online]. Available: https://www.ieso.ca/Corporate-IESO/Media/News-Releases/2024/10/Electricity-Demand-in-Ontario-to-Grow-by-75-per-cent-by-2050. [Accessed: 24-Oct-2025].

[2] Y. Li, C. Wang, and G. Li, "A Mini-Review on High-Penetration Renewable Integration Into a Smarter Grid," Frontiers in Energy Research, vol. 8, p. 84, May 2020. [Online serial]. Available: https://www.frontiersin.org/articles/10.3389/fenrg.2020.00084/full. [Accessed: 24-Oct-2025].

[3] Physicians, Scientists, and Engineers for Healthy Energy, Peaker Plant Mapping Project: Technical Documentation, Apr. 2023. [Online]. Available: https://www.psehealthyenergy.org/wp-content/uploads/2023/04/Peaker-Technical-Documentation.pdf. [Accessed: Oct. 24, 2025].

[4] R. Varma. ECE 4464, Class Lecture, Topic: "Conservation Voltage Reduction". Department of Electrical and Computer Engineering, Western University, London, ON, Canada. Sept. 5, 2025.

[5] American National Standard for Electric Power Systems and Equipment—Voltage Ratings (60 Hz), ANSI C84.1-2020, American National Standards Institute, New York, NY, USA, 2020.

[6] Independent Electricity System Operator, “Power Data,” IESO, [Online]. Available: https://www.ieso.ca/power-data. [Accessed: Oct. 24, 2025].

[7] F. Ding and M. Baggu, “Coordinated use of smart inverters with legacy voltage regulating devices in distribution systems with high distributed PV penetration—increase CVR energy savings,” National Renewable Energy Laboratory (NREL), Golden, CO, USA, Tech. Rep. NREL/TP-5D00-81454, 2021. [Online]. Available: https://www.nrel.gov/docs/fy21osti/81454.pdf. [Accessed: Oct. 24, 2025].

[8] Independent Electricity System Operator, Transmission Planning Guideline – Consideration of Losses in the Transmission Planning Process, July 22, 2021. [Online]. Available: https://www.ieso.ca/-/media/Files/IESO/Document-Library/engage/tl/tl-20210722-transmissionplanning-guideline-consideration-of-losses.pdf. [Accessed: Oct. 24, 2025].

[9] E. Law, “3 types of line losses in power transmission,” Cence Power Blog, Dec. 20, 2022. [Online]. Available: https://www.cencepower.com/blog-posts/line-losses-power-transmission-3-types. [Accessed: Oct. 24, 2025].

[10] Office of Energy Efficiency and Renewable Energy, “Solar integration: inverters and grid services basics,” Energy.gov, 2024. [Online]. Available: https://www.energy.gov/eere/solar/solar-integration-inverters-and-grid-services-basics. [Accessed: Oct. 24, 2025].

[11] R. K. Varma, Smart Solar PV Inverters with Advanced Grid Support Functionalities, 1st ed., Wiley-IEEE Press, Hoboken, NJ, USA, 2021.

[12] R. K. Varma, K. B. Nanavati, and S. Mohan, “Simultaneous line loss minimization and CVR with smart inverter control of BESS and PV system as STATCOM,” in Proc. IEEE Power & Energy Society General Meeting (PESGM), Montreal, QC, Canada, Aug. 2020. [Online]. Available: https://doi.org/10.1109/PESGM41954.2020.9281510. [Accessed: Oct. 24, 2025].

[13] R. K. Varma, T. Hartley, S. Mohan, A. Royal, F. Sara, D. Sarin, and S. Williams, “Utility energy savings by novel smart inverter control of PV systems, BESS and EV charging stations as STATCOMs,” Proc. CIGRE Canada Conf., Toronto, ON, Canada, Oct. 19–22, 2020. [Online]. Available: https://www.cigre.ca/papers/utility-energy-savings-by-novel-smart-inverter-control-of-pv-systems-bess-and-ev-charging-stations-as-statcoms. [Accessed: Oct. 24, 2025].

[14] Electrical4U, “Load flow or power flow analysis,” Electrical4U, Oct. 27, 2020. [Online]. Available: https://www.electrical4u.com/load-flow-or-power-flow-analysis/. [Accessed: Oct. 24, 2025].

[15] IEEE Standard for Interconnection and Interoperability of Distributed Energy Resources with Associated Electric Power Systems Interfaces, IEEE Std 1547-2018, Apr. 2018. [Online]. Available: https://doi.org/10.1109/IEEESTD.2018.8332112. [Accessed: Oct. 24, 2025].

[16] IEEE Standard for Interconnection and Interoperability of Inverter-Based Resources (IBRs) Interconnecting with Associated Transmission Electric Power Systems, IEEE Std 2800-2022, Apr. 2022. [Online]. Available: https://doi.org/10.1109/IEEESTD.2022.9783135. [Accessed: Oct. 24, 2025].

[17] Power Systems Test Case Archive, "IEEE 14-Bus Test System," University of Washington. [Online]. Available: https://labs.ece.uw.edu/pstca/pf14/pg_tca14bus.htm. [Accessed: Dec. 22, 2025].

[18] Independent Electricity System Operator (IESO), "Electricity demand in Ontario to grow by 75 per cent by 2050," IESO, Toronto, ON, Canada. [Online]. Available: https://www.ieso.ca/en/Sector-Participants/Planning-and-Forecasting/Demand-Forecasts. [Accessed: Dec. 22, 2025].

[19] GridLAB-D Project, "Power Flow User Guide," *GridLAB-D Documentation*. [Online]. Available: https://gridlab-d.shoutwiki.com/wiki/Power_Flow_User_Guide. [Accessed: Dec. 30, 2025].

[20] DIgSILENT GmbH, "PowerFactory – Downloads and Documentation," *DIgSILENT PowerFactory Documentation Portal*. [Online]. Available: https://www.digsilent.de/en/downloads.html. [Accessed: Dec. 30, 2025].

[21] Electric Power Research Institute (EPRI), "OpenDSS Power Flow Overview," *OpenDSS Documentation*. [Online]. Available: https://opendss.epri.com/PowerFlow.html. [Accessed: Dec. 30, 2025].

[22] Siemens Energy, "PSS®E—Power Transmission System Planning Software," *Siemens Product Documentation*. [Online]. Available: https://www.siemens.com/global/en/products/energy/grid-software/planning/pss-software/planning/pss-e.html. [Accessed: Dec. 30, 2025].

[23] PowerWorld Corporation, "PowerWorld Simulator User Guide, Version 11," *PowerWorld Documentation*. [Online]. Available: https://www.powerworld.com/files/pw110UserGuide.pdf. [Accessed: Dec. 30, 2025].

[24] The MathWorks, Inc., "MATLAB and Simulink Documentation," *MATLAB & Simulink User Documentation*. [Online]. Available: https://www.mathworks.com/help/. [Accessed: Dec. 30, 2025].

[25] Manitoba HVDC Research Centre, “PSCAD—Electromagnetic Transient Simulation Software,” *PSCAD User Documentation*. [Online]. Available: https://www.pscad.com/software/pscad. [Accessed: Dec. 30, 2025].

[26] DIgSILENT GmbH, “PowerFactory Dynamic Simulation (RMS),” *DIgSILENT PowerFactory Documentation*. [Online]. Available: https://www.digsilent.de/en/powerfactory.html. [Accessed: Dec. 30, 2025].

[27] PowerWorld Corporation, “PowerWorld Simulator: Dynamic Simulation,” *PowerWorld Simulator Documentation*. [Online]. Available: https://www.powerworld.com/products/simulator/dynamics. [Accessed: Dec. 30, 2025]

8 Gantt Chart

The updated Gantt chart is provided in the Appendix. As mentioned in Section 5.1, our scope of work changed between the project proposal submission date and the midterm report submission date. Our Gantt chart tasks, and consequently our timelines, changed accordingly. We also decided to aim for an earlier project to finish around end of February. Additionally, we modified how our Gantt chart was broken down. Previously, our Gantt chart was split into sections based on major deliverables and activities leading up to submission dates. Our current Gantt chart is broken based on our roles specified in Section 5.2. We found this method of organizing clearer and more appropriate for how we were assigning and completing tasks.

9 Appendix

Attached are the minutes from meetings with faculty advisors and our team’s updated Gantt chart.

Capstone Meeting

16 DECEMBER 2025 / 10:00 AM / ZOOM

16 DECEMBER 2025 / 2:00 PM / ZOOM

Attendees

Meeting 1 - Emma Wang, James Thompson, Nafia Nawaz and Madison Sylvester

Meeting 2 - Emma Wang, James Thompson, Nafia Nawaz and Madison Sylvester, Dennis

Agenda

- Confirm if IEEE 1547 standard relates to what we are doing with PV inverters
- Confirm options for physical prototype
    - Certification may require $400 → most of our budget!!
- Ask Varma about PV farm power output
    - We need data for the curve
    - Confirm if using IESO data (Ontario wide) is okay
- Ask Varma about cases to do and if he thinks it's worth automating
    - We want to finalize studies so we can divy up the work

Notes

- We can do PV farm p output curve by season and see what size farm satisfies
- We can do hourly demand by season (right now, using average over 2025 so far)
- We can test different X/R ratios
- See Excel for more notes from Dennis

- Midterm progress report
    - Intro background - **Copy from proposal + edits from profs**
    - Design Approach - **Emma**
    - Prelim Analysis - **Nafia**
        - Matrix of what tools we're using and why and if they are suitable or not
        - Can include work we have done so far as part of justification
    - Prototype Validation plan - **James**
    - PM - **Emma**

    - AI - **Maddy**
- Emma will start on Dec 20th, plan is to finish before Dec 24 so everyone can enjoy Christmas

Action Items

Next Meeting Agenda

- TBD

Capstone Meeting

30 OCTOBER 2025 / 11:00 AM / ZOOM

Attendees

Prof. Varma, Prof. Michaelson, Emma Wang, James Thompson, Nafia Nawaz and Madison Sylvester

Agenda

Next steps for project

Notes

Specific steps for what we are doing next:

1. Putting the IEEE bus systems into software:
    a. Put the IEEE-14 bus system into PowerWorld. Since the Demo version can only handle 13 buses, we will need to merge buses 12 and 14 together.
    b. ***OR*** put the IEEE-14 bus system into PSSE which can handle 250 buses and doesn't require reducing # of buses.

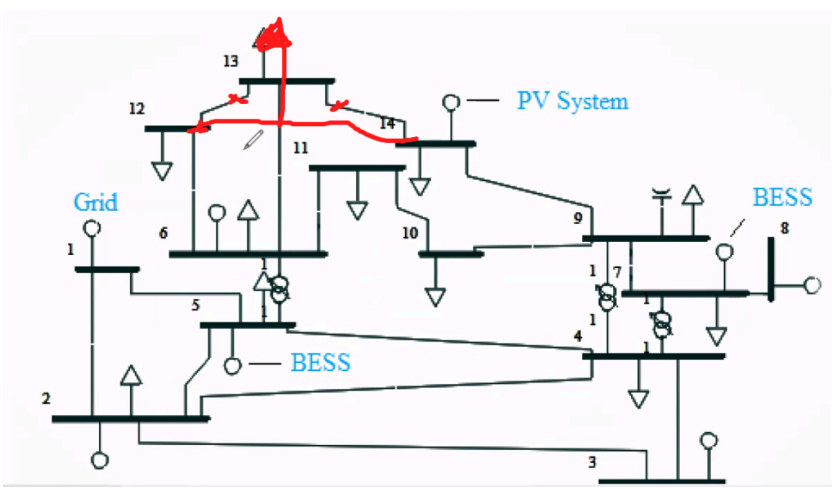

2. For the base case (without PV farms), we want to find voltage magnitudes and angles at all the buses for EVERY HOUR.
3. Assume the load given is for the peak (~7pm).

4. Use IESO data to find load curve and find load values for other times relative to the load at the peak (scale down ALL the loads in the network → scale down S = P +jQ)
5. Perform the load flow study at every hour for **BASE CASE**
    a. Outputs = voltage magnitude and angle for every bus at every hour
6. Connect PV farms to buses with maximum load
    a. # of PV farms is a variable
    b. Begin with 2 PV farms, then can increase
    c. Ratings of the PV farms:
        i. We need to experiment with various solar farm ratings
        ii. Can start with making the P ratings of the PV farm equal to the P ratings of the loads we are connecting to them during **12 PM = MAX P OUTPUT**
        iii. Calculate the Q rating depending on time of day
7. Complete the load flow studies for after PV farms added

Screenshot of Dr. Varma's notes:

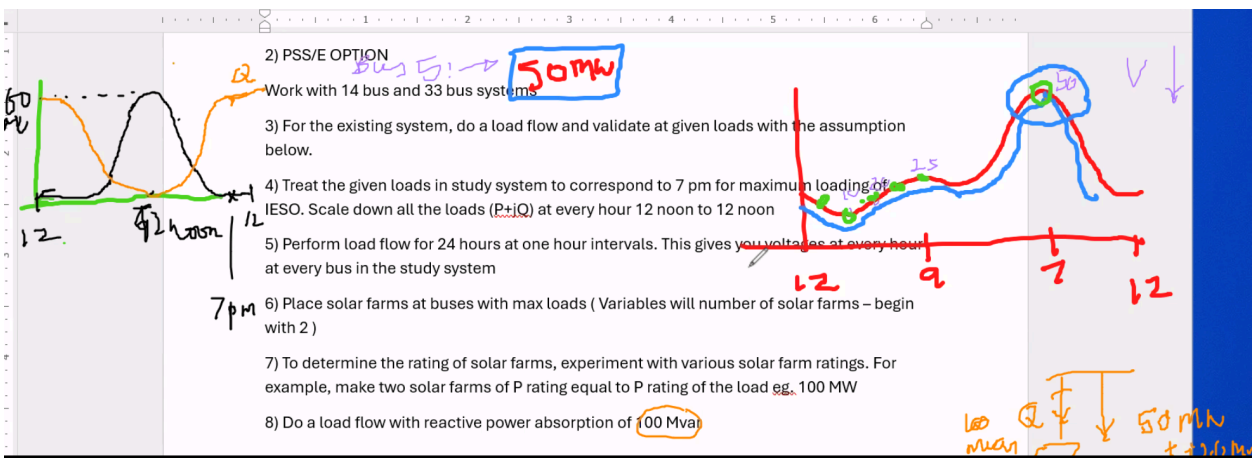

Possibility for physical prototype:

- Questions to consider:
    - Do we need a physical demo?
    - Are we capable of making one based on our resources / time?
    - Loads CANNOT be a constant P load (should be passive then?)
- We need to determine R and L to best model a transmission line

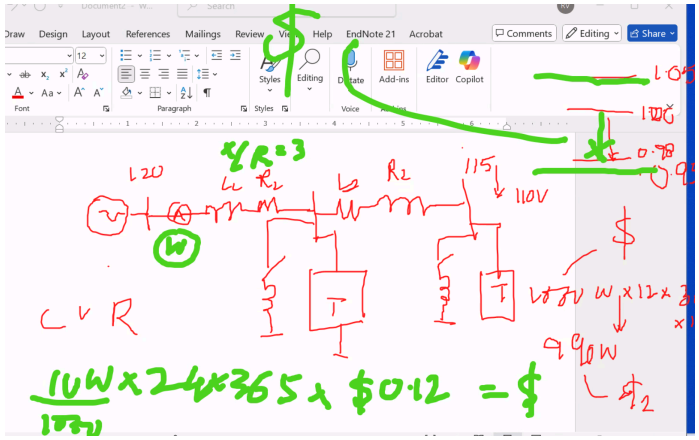

- We can show the voltage and P drop
- And then calculate the cost savings → can be part of our final dashboard

Splitting work

- Consider how we want to divide labour
- 2 people on software, 2 on hardware?
- 2 on one network, 2 on other (everyone on software), everyone does hardware?
- Make sure everyone is informed on all stuff

Design review

Design Reviews

- Nov 7 & 14, 2025 & Week of Jan 19, 2025
- TA/me and another faculty member in project area will meet with each team for 10-15 min.
- Go over your design concepts and identify any issues, evaluate state of project and give you feedback based on submitted proposal
- Present design work done to date (<5 slides)
  1) Concept design and evaluation / Final design implementation
  2) Analysis/Tool usage - any issues
  3) Prototype/Software Plan/Progress
  4) Iteration strategy - in case original idea or testing does not work/Validation plan
  5) Team - work distribution
- More of a checkpoint on viability of design in the process before final design.
- All Team members must attend
- Will most likely be during lecture hours and a schedule will be set up with each team.

Action Items

Next steps for project

- Dr. Varma to send IEEE 14 bus system data and Texas A&M load curve data by end of day October 31th (Thursday)
- Every one to complete steps 1-5 on Powerworld for now
    - We can maybe gather the load curve data together based on data Dr. Varma sends
- Determine how tasks will be split - maybe deviating from project proposal?

Next Meeting Agenda

- November 11th
    - Dr. Michaelson is free after 1pm
    - 3:30pm - 5pm tentatively - need to confirm with Maddy

Capstone Meeting

23 SEPTEMBER 2025 / 2:00 PM / ZOOM

Attendees

Prof. Varma, Prof. Michaelson, Emma Wang, James Thompson, Nafia Nawaz and Madison Sylvester

Agenda

Discussion on Literature Review

- Questions for Profs

Prototype Options

- What can we prototype? Will it depend on load flow simulations?

Signature for Meeting Minutes

- Ask profs about signing off

Notes

- Next steps are to start project proposal
- We will begin simple, and add more variables as we go on
- Focusing on reactive power control with PV farms to shave peak energy demands while seeing if it reduces line losses at the same time
    - Going to look at it 24hrs in the day (exploring “what ifs”)
- Starting with IEEE 14 bus system (Tx system)
- We will also do a Dx system later

Action Items

1. Team to complete Project proposal and send to professors for review by Oct. 1st
2. Submit project proposal by Oct. 6th

Next Meeting Agenda

Capstone Meeting

09 SEPTEMBER 2025 / 2:00 PM / ZOOM

Attendees

Prof. Varma, Prof. Michaelson, Emma Wang, James Thompson, Nafia Nawaz and Madison Sylvester

Agenda

Address how often we'll be meeting

1. IRL or Online?

Confirm supervisor's availability

2. How often do we meet with each supervisor?

Confirm Topic

3. Varma's Idea?
4. Is there anything else we should add?

Confirm the AI component

5. How will AI be applied to this project?
6. Ideally, something with predictive maintenance or the ability to predict faults/trends in data?
7. Maybe a DL algorithm with a time dependency to help with seasonal peak shaving?

Notes

AI

- for controller --> have it run simultaneously with conventional controller and see how it could improve upon it
- need a rich dataset

CVR

- operate around .97/.98 pu

- Using solar farms for CVR - very novel
    - No additional investment costs
    - Just need to add some additional controls - to absorb Q for voltage regulation
    - Smart inverters
    - Energy storage
- Hawaii and California CVR study
    - Findings = 1-2% power reduction ~¼ London's P consumption
- Want to work with bigger systems, use PSSE for study simulations
- Work required:
    - Load flow studies on PSSE software (will learn in class, lab 1)
        - Do a load flow study at every hour
        - Using 500MW system rather than ON 18MW load demand
        - Solar location and capacities provided
        - Can write a script to automate system studies
        - 4 networks
        - Can consider seasonality - where do we get load demand curves from?
    - Change reactive power absorbed and see impact on reduction of power consumption of load
        - Going to simulate various scenarios
    - AI component
        - Optimization → to get voltage pu down
- VVO = volt VAR optimization
- First 2-3 weeks
    - Become familiar with literature (**Action**: Varma to share)
    - Literature review required for several portions of final report
        - Concept generation, project objectives, background information
    - **Action**: meet again after reading complete to review with Varma
        - Emma to send out meeting invite for Sept 23rd 2pm
- Weekly meetings Monday 7pm
- **Team** to review project proposal criteria b4 first weekly meeting

Action Items

1. Varma to send literature, team to review
2. Fill out team form on Brightspace
3. Review project proposal
4. Weekly team meeting on Sept. 15th

Next Meeting Agenda

Project Proposal and literature review discussion

Capstone Meeting

05 SEPTEMBER 2025 / 5:30 PM / ZOOM

Attendees

Prof. Varma, Emma Wang, James Thompson, Nafia Nawaz and Madison Sylvester

Agenda

Address how often we'll be meeting

1. IRL or Online?

Confirm supervisor's availability

2. How often do we meet with each supervisor?

Confirm Topic

3. Varma's Idea?
4. Is there anything else we should add?

Confirm the AI component

5. How will AI be applied to this project?
6. Ideally, something with predictive maintenance or the ability to predict faults/trends in data?
7. Maybe a DL algorithm with a time dependency to help with seasonal peak shaving?

Notes

- **Meeting with Dr. Varma only**
- **Past discussion with Michaelson: explained the situation, the topic we settled on is CVR with solar farms and the need for co-supervising, and he's all good with it**
- **Send timelines for Capstone to supervisors, potentially make a calendar?**
- **Meeting next week with both supervisors at 2 pm on Tuesday, September 9th**

Action Items

1. Research topic
2. Send in our group list and topic confirmation
3. Confirm when/where we have weekly meetings and check-ins with supervisors
4. Get started on a project timeline
5. Send Zoom link for the meeting on Tuesday the 9th at 2 pm
6. Send capstone slides to supervisors and mention important dates and propose meeting times before those dates

Next Meeting Agenda

Ideas for Project Proposal and Midterm Review

ECE 4416 Capstone Project

Nafia, James, Madison, Emma

TASK	ASSIGNED TO	PROGRESS	START	END
Data Analysis				
Analyze distribution feeder network and make necessary modifications	Emma	100%	12-17-25	12-20-25
Determine which cases to run load flow studies under for distirbution feeder	All	100%	12-23-25	12-24-25
Determine CVR factor for relevant buses in networks	All	100%	12-23-25	12-24-25
Analyze IESO load curves by season	Nafia	25%	1-3-26	1-10-26
Analyze solar farm output in Ontario	James	25%	1-3-26	1-10-26
Load Flow Studies				
Develop Python script to automate load flow studies	Emma	10%	12-30-25	1-13-26
Complete Dx network studies using automation tool	Emma, Nafia	0%	1-14-26	1-21-26
Discuss results of Dx network studies & determine which studies to perform for IEEE 14-bus system	All	0%	1-21-26	1-24-26
Familiarize with PSS/E	Emma, Nafia	0%	1-24-26	1-29-26
Complete test case of studies for IEEE 14-bus system manually to validate tool	Emma	0%	1-30-26	2-1-26
Complete IEEE 14-bus system studies using automation tool	Emma, Nafia	0%	2-1-26	2-11-26
Physical Prototype				
Finalize prototype circuit schematic	James	100%	12-17-25	12-27-25
Finalize materials list for prototype	James	25%	12-28-25	1-7-26
Conduct load flow studies on schematic	James	0%	1-7-26	1-17-26
Discuss study results with Dr. Michaelson and determine per unit values required for physical prototype	James	0%	1-17-26	1-22-26
Send final schematic and materials list to electronics shop for review	James	0%	1-22-26	1-26-26
Build and test prototype	James	0%	1-26-26	2-25-26
AI Component				
Develop preliminary model	Maddy	100%	12-17-25	12-27-25
Finalize data set to use for AI model training set	Maddy	50%	12-27-25	1-3-26
Train AI model	Maddy	0%	1-3-26	1-13-26
Develop script to compare load flow studies with OPF values	Maddy	0%	1-3-26	1-13-26
Compare AI model results with actual results	Maddy	0%	1-13-26	1-18-26
Final Presentation and Demo				
Develop KPI dashboard & figures for final presentation	All	0%	2-1-26	3-1-26
Complete final presentation / demo	All	0%	3-26-26	3-28-26
Complete final report	All	0%	3-28-26	4-4-26

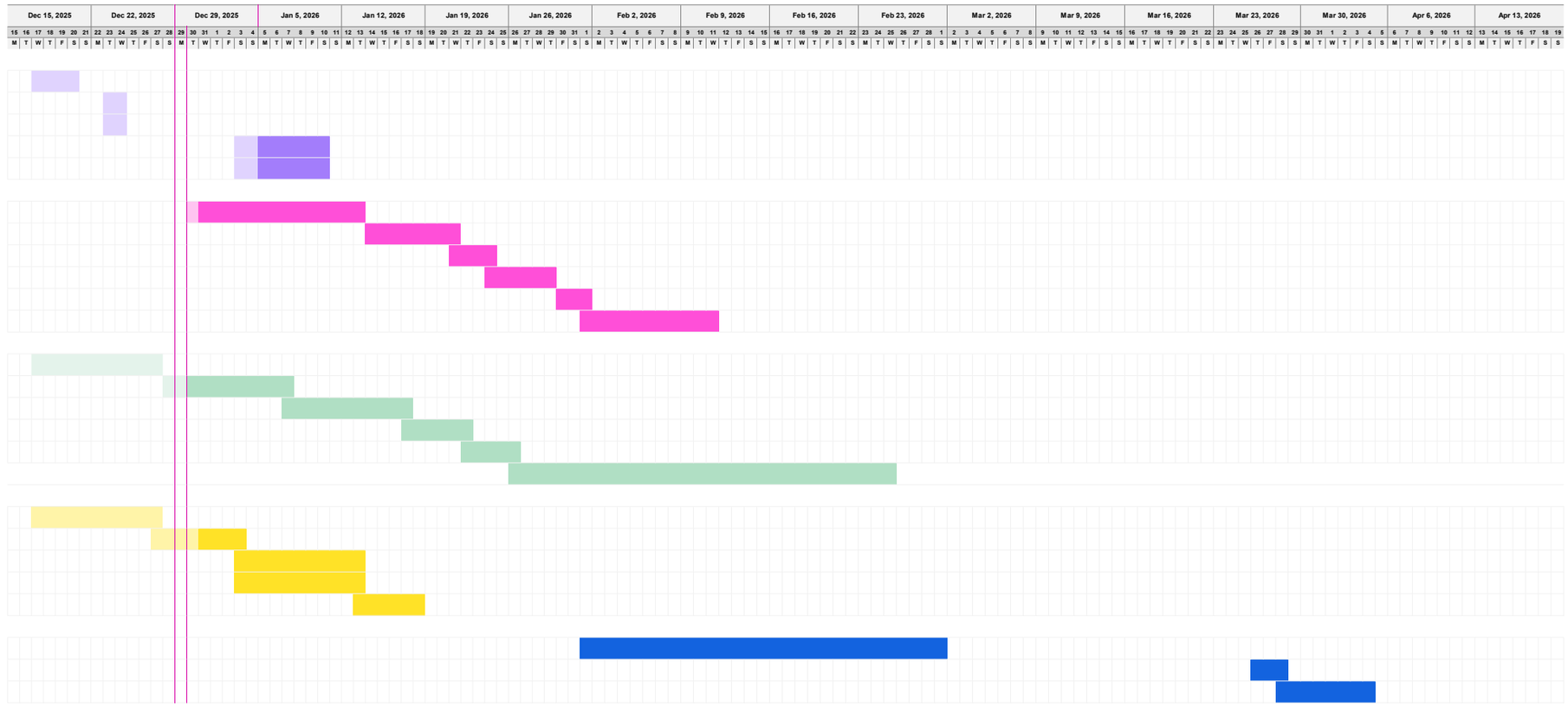

Insert new rows ABOVE this one